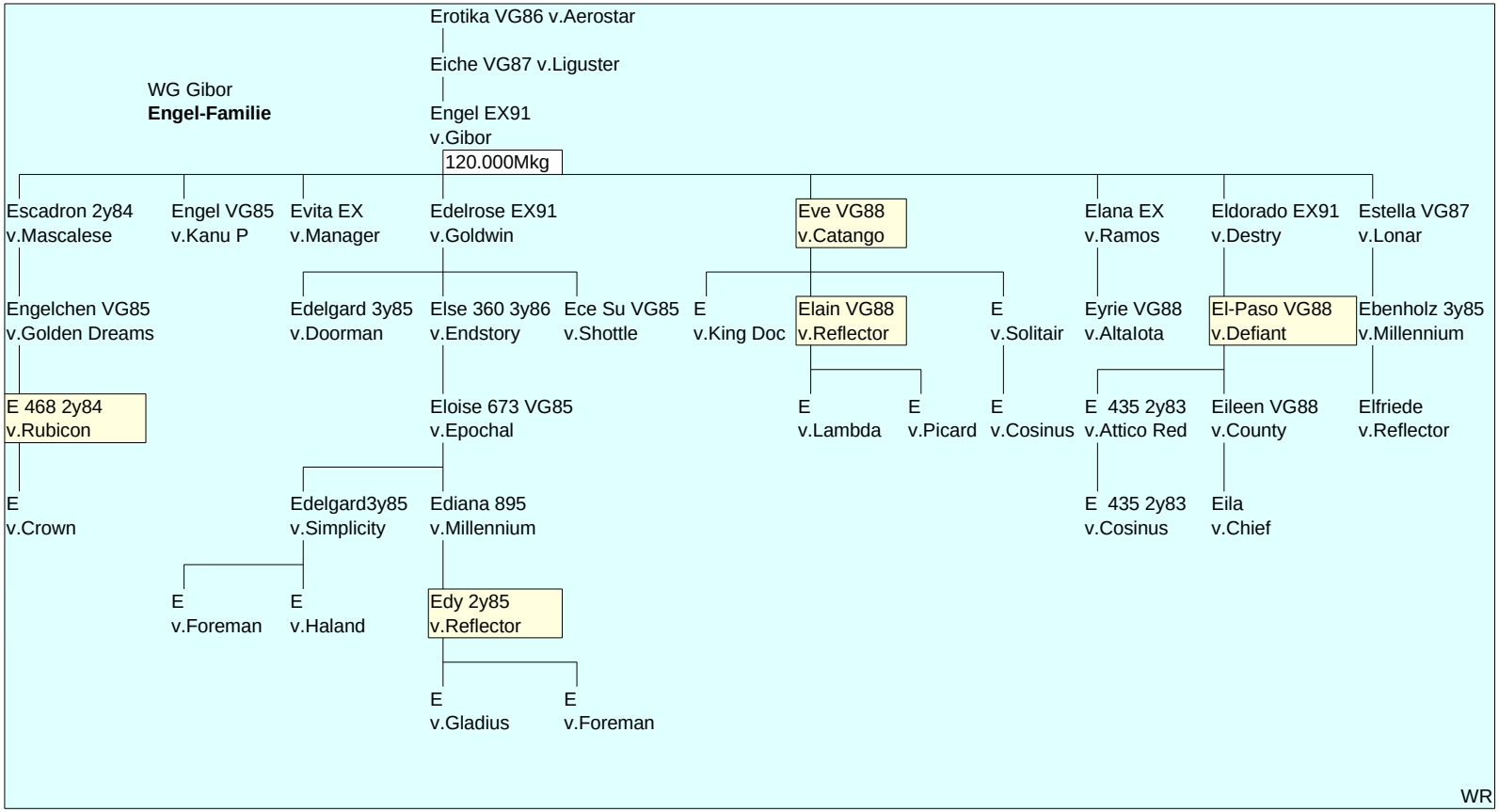

Goldwin Edelrose

Destry Eldorado